Pressure relief valves type ARAM

two stage, in line mounting - G 3/4" and G 1¹/₄" threaded ports

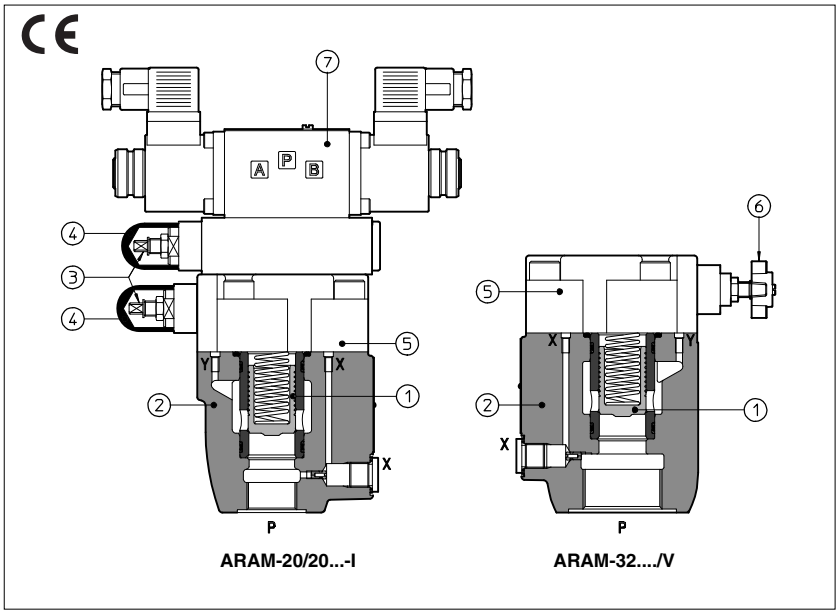

ARAM are double stage pressure relief valve with balanced poppet and GAS threaded ports.

In standard versions the piloting pressure of the poppet ① of the main stage ② is regulated by means of a grub screw ③ protected by cap ④ in the cover ⑤. Optional versions with setting adjustment by handwheel ⑥ instead of the grub screw are available on request. Clockwise rotation increases the pressure.

Also available in safety option with sealed regulation:

- /PED conforming to PED Directive (97/23/CE)

Set pressure at:
ARAM-20 = 25 l/min
ARAM-32 = 25 l/min
For this version the P, Q limits are shown in section 8.

ARAM can be equipped with a venting solenoid valve ⑦ (for venting or for different pressure setting). Another setting control can be made through the independent pilot port.

Threaded ports: G 3/4", G 1¹/₄".
Max flow: 350, 500 l/min respectively.
Pressure up to 350 bar.

1 MODEL CODE

ARAM - 20 / 2 0 /210 /100/100 /V /* -I X 24DC ** /*

ARAM = pressure relief valve threated port connections

Size:
20 = port P - G 3/4"
32 = port P - G 1¹/₄"

Number of the different setting pressure values: (1)
1 = one setting pressure
2 = two setting pressure
3 = three setting pressure

0 = venting with de-energized solenoid (1)
1 = venting with energized solenoid
2 = without venting

Setting: see section 2 for available setting (1)

Pressure range of second/third setting (**not for /PED**):
50 = 4÷50 bar; **100** = 6÷100 bar; **210** = 7÷210 bar; **350** = 8÷350 bar

Options, see section 4
/E /PED /V /WP /Y

Only for /PED option
p = required set pressure

Solenoid of pilot valve: (1)
-I = solenoid OI (DHI) for AC and DC supply

X = without connector (1)
See section 5 for available connectors, to be ordered separately

Voltage code, see section 6: (1)
00 = solenoid valve without coils (only for OI solenoid)

Series number **

Syntethic fluids:
WG = water-glycol
PE = phosphate ester

(1) Only for ARAM with solenoid valve for venting and/or for the selection of the setting pressure

2 HYDRAULIC CHARACTERISTICS

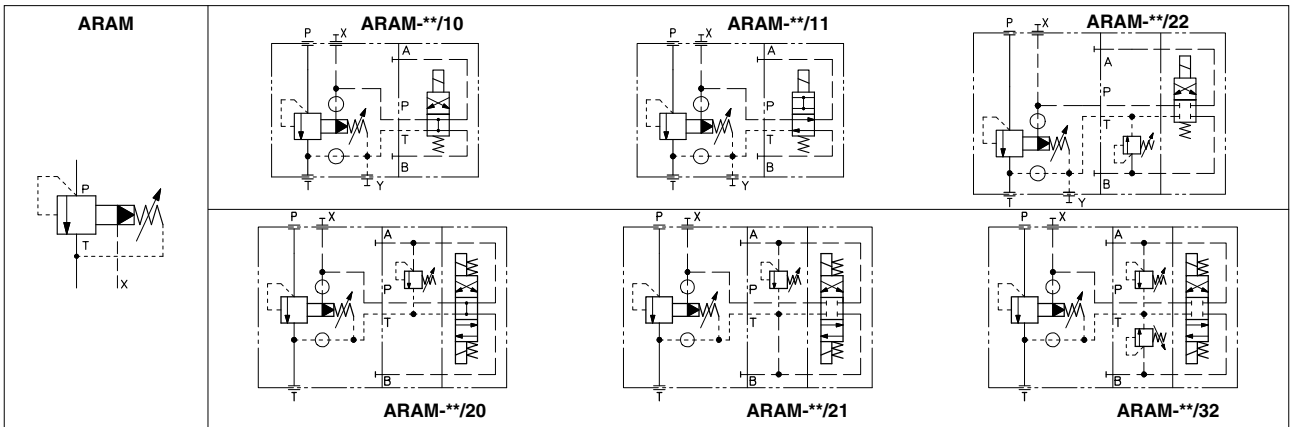

Valve model		ARAM-20	ARAM-32
Setting	standard	50; 100; 210; 350	
	/PED		
Pressure range	standard	4÷50; 6÷100; 7÷210; 8÷350	
	/PED	10÷50; 10÷100; 10÷210; 10÷350	
Max flow	standard	350	500
	/PED		

3 MAIN CHARACTERISTICS OF PRESSURE CONTROL VALVES TYPE ARAM

Assembly position / location	Any position
Ambient temperature	-20°C to + 70°C
Fluid	Hydraulic oil as per DIN 51524 . . . 535; for other fluids see section 1
Recommended viscosity	15 ÷ 100 mm^2/s at 40°C (ISO VG 15 ÷100)
Fluid contamination class	ISO 19/16, achieved with in line filters at 25 µm value and $\beta_{25} \geq 75$ (recommended)
Fluid temperature	-20°C +60°C (standard and /WG seals) -20°C +80°C (/PE seals)

3.1 Coils characteristics

Insulation class	H
Connector protection degree	IP 65
Relative duty factor	100%
Supply voltage and frequency	See electric feature 7
Supply voltage tolerance	± 10%

4 OPTIONS

/E = external pilot
/PED = conforming to Directive 97/23/CE (not available with option /V)
/V = regulating handwheel instead of grub screw protected by cap (for handwheel features, see table K150), (not available with option /PED)
/WP = prolunged manual override protected by rubber cap (only for ARAM with pilot solenoid valve)
/Y = external drain (only for ARAM with pilot solenoid valve)

5 ELECTRIC CONNECTORS ACCORDING TO DIN 43650 FOR ARAM WITH SOLENOID VALVE

The connectors must be ordered separately

Code of connector	Function
SP-666	Connector IP-65, suitable for direct connection to electric supply source
SP-667	As SP-666 connector IP-65 but with built-in signal led, suitable for direct connection to electric supply source

For other available connectors see tab. E010 and K500.

6 ELECTRIC FEATURES FOR ARAM WITH SOLENOID VALVE

Type of solenoid	External supply nominal voltage ± 10% (1)		**Voltage code**	Type of connector	Power consumption (3)	Code of spare coil	Colour of coil label
OI	DC	6 DC 12 DC 24 DC 48 DC	**6 DC** **12 DC** **24 DC** **48 DC**	SP-666 or SP-667	33 W	SP-COU-6DC /80 SP-COU-12DC /80 SP-COU-24DC /80 SP-COU-48DC /80	brown green red silver
	AC	110/50 AC (2) 120/60 AC 230/50 AC (2) 230/60 AC	**110/50/60 AC** **120/60 AC** **230/50/60 AC** **230/60 AC**	SP-666 or SP-667	60 VA (4)	SP-COI-110/50/60AC /80 SP-COI-120/60AC /80 SP-COI-230/50/60AC /80 SP-COI-230/60AC /80	yellow white light blue silver

(1) For other supply voltages available on request see technical table E010.
(2) Coil can be supplied also with 60 Hz of voltage frequency: in this case the performances are reduced by 10 ÷ 15% and the power consumption is 55 VA.
(3) Average values based on tests performed at nominal hydraulic condition and ambient/coil temperature of 20°C.
(4) When solenoid is energized, the inrush current is approx 3 times the holding current.
Inrush current values correspond to a power consumption of about 150 VA.

7 **REGULATED PRESSURE VERSUS FLOW DIAGRAMS** based on mineral oil ISO VG 46 at 50°C

ARAM-20

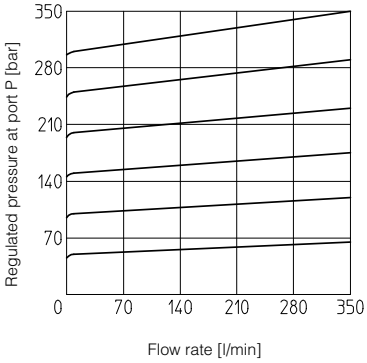

ARAM-32

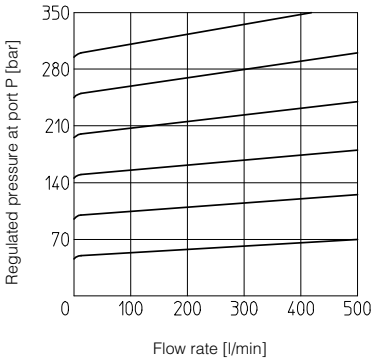

ARAM-20/*/PED

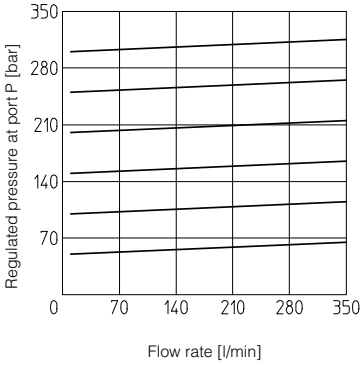

ARAM-32/*/PED

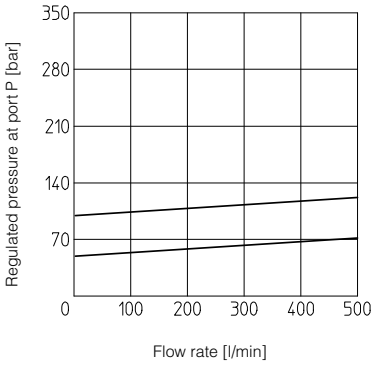

8 **PERMISSIBLE RANGE (shared area)** based on mineral oil ISO VG 46 at 50°C

ARAM-20/*/PED

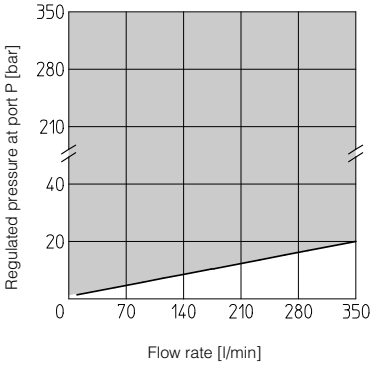

ARAM-32/*/PED

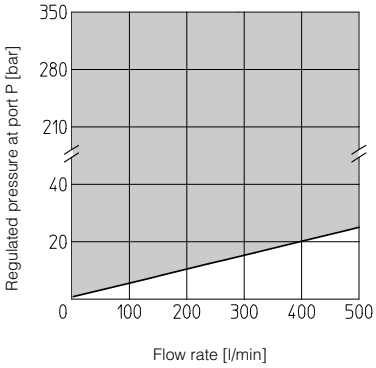

9 **MINIMUM PRESSURE VERSUS FLOW DIAGRAMS** based on mineral oil ISO VG 46 at 50°C

ARAM-20

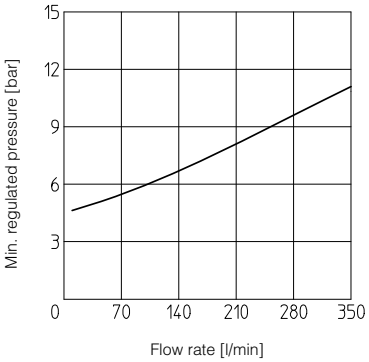

ARAM-32

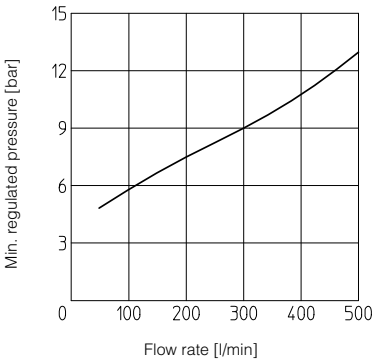

ARAM-20

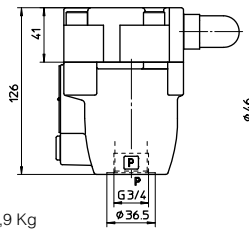

Mass: 3,9 Kg

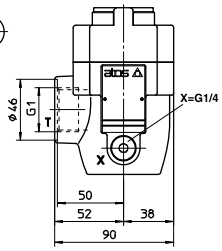

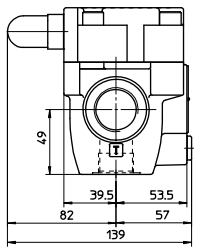

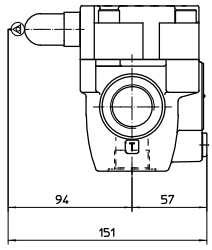

OPTION /PED

X = port connection for external pilot
Y = port connection for external drain

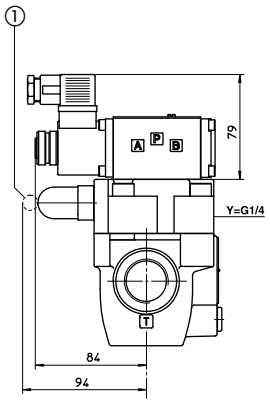

ARAM-20/10/-IX**
ARAM-20/11/-IX**

Mass: 5,4 Kg

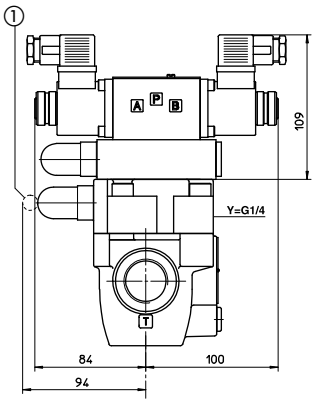

ARAM-20/20/-IX**
ARAM-20/21/-IX**

Mass: 7,1 Kg

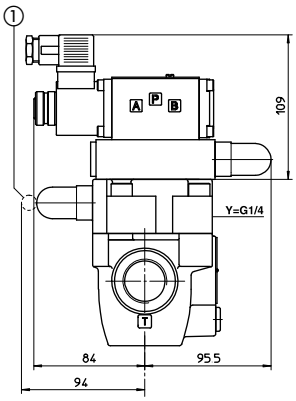

ARAM-20/22/-IX**

Mass: 6,8 Kg

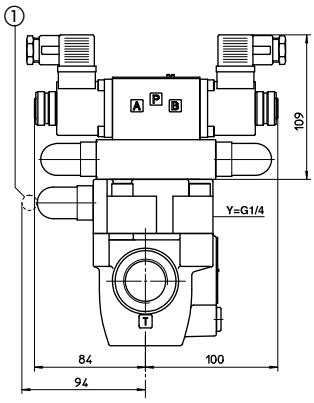

ARAM-20/32/-IX**

Mass: 7,4 Kg

① = sealed adjustment only for /PED option

ARAM-32

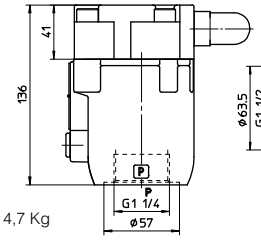

Mass: 4,7 Kg

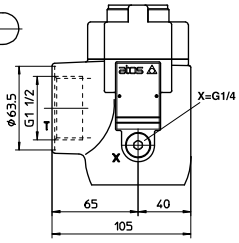

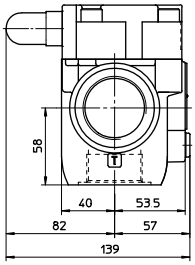

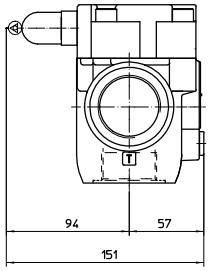

OPTION /PED

X = port connection for external pilot
Y = port connection for external drain

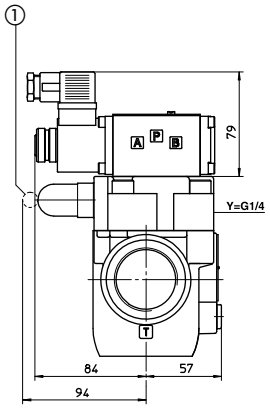

ARAM-32/10/-IX**
ARAM-32/11/-IX**

Mass: 6,2 Kg

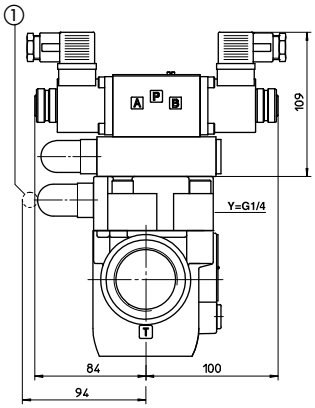

ARAM-32/20/-IX**
ARAM-32/21/-IX**

Mass: 7,9 Kg

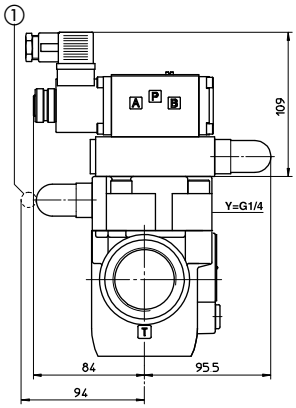

ARAM-32/22/-IX**

Mass: 7,6 Kg

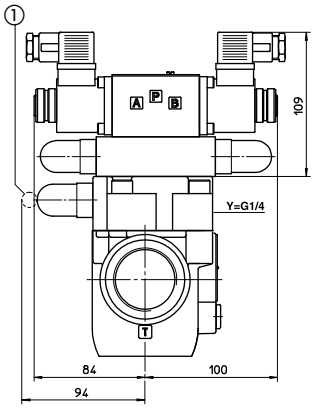

ARAM-32/32/-IX**

Mass: 8,2 Kg

① = sealed adjustment only for /PED option

Overall dimensions refer to valves with connectors type SP-666